CONNECTING BP CONTROLS BOXES TO 3-PHASE (3 PHASES +1 NEUTRAL + EARTH)

- Completely remove jumper connecting J51 and J88
- Completely remove jumper connecting J52 and J62
- Move jumper from J12 to J79. The new connection will be from J41 to J79
- Move jumper from J36 to J45. The new connection will be from J60 to J45
- Put DIP switch A5 OFF

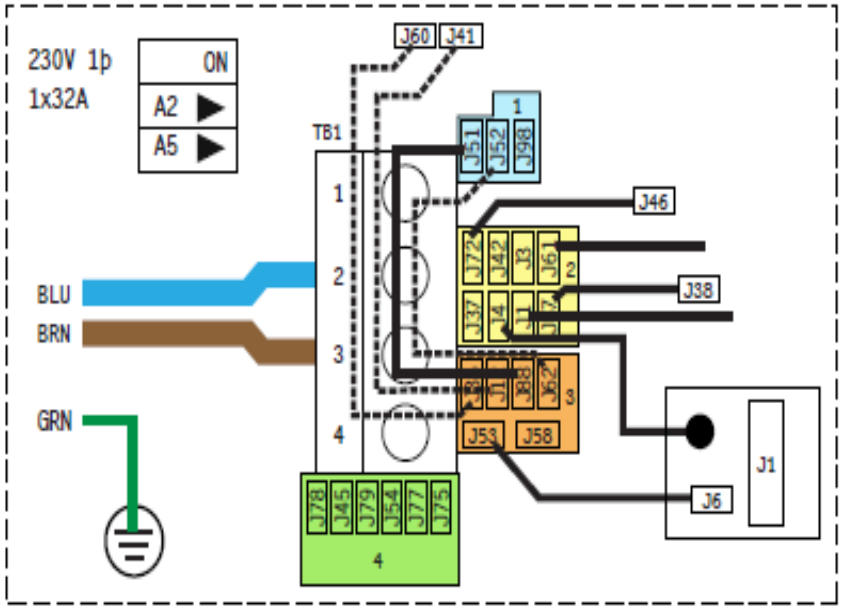

1-phase connection (1 x 16amps/32amps)

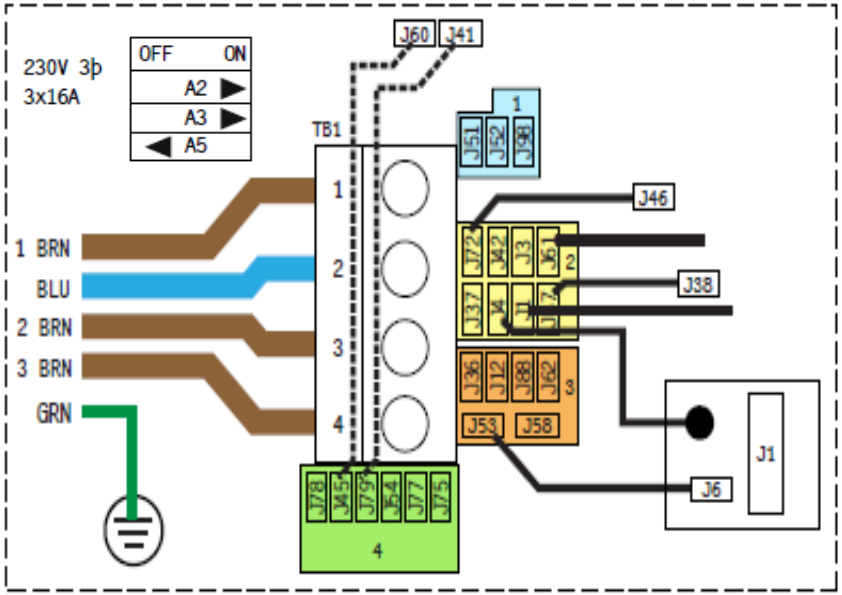

3-phase connection (3 x 16 amps)

BRANCHEMENT DU COFFRET BALBOA SERIES BP SUR TRIPHASEE (3 PHASES +1 NEUTRE + TERRE)

- Enlever completement le cable entre J51 et J88
- Enlever completement le cable entre J52 et J62
- Deplacer le cable de J12 a J79. La nouvelle connection sera entre J41 et J79
- Deplacer le cable de J36 a J45. La nouvelle connection sera entre J60 et J45
- Mettez le DIP switch A5 sur OFF

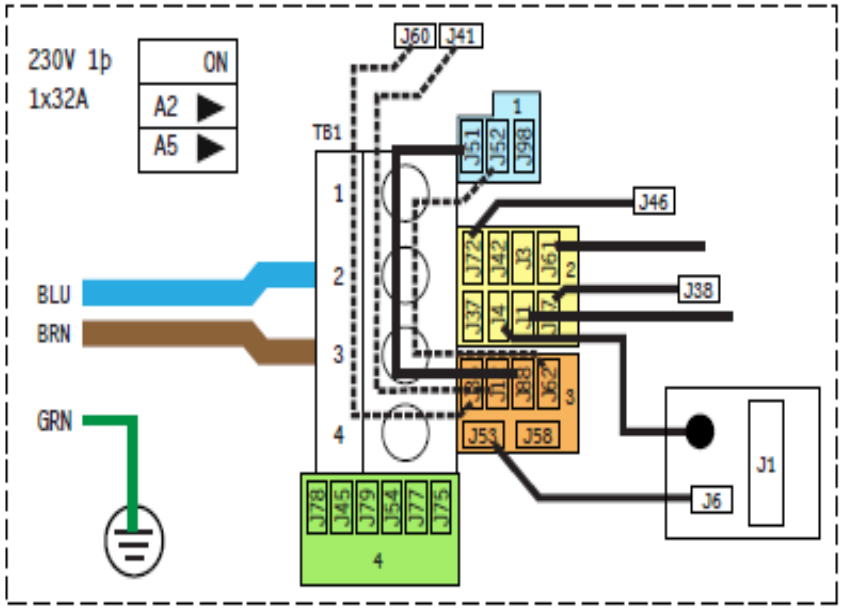

Cablage monophasee (1 x 16amps/32amps)

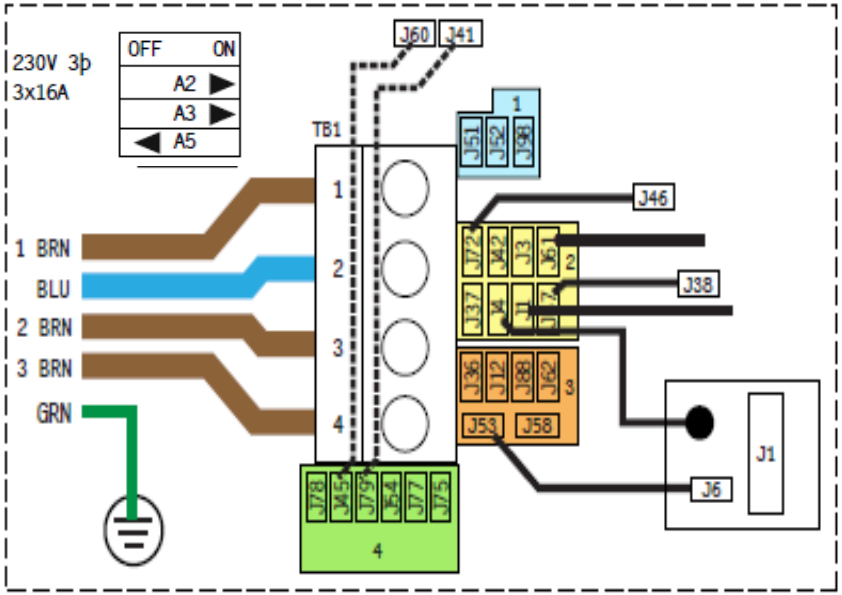

Cablage triphasee (3 x 16 amps)